FOR TRUSSES HAVING AN OVERALL LENGTH OF 35 FEET (10.7m) OR 6 FEET (1.8m) OVERALL HEIGHT, ERECTION SHALL BE SUPERVISED BY EITHER A REGISTERED PROFESSIONAL ENGINEER OR REGISTERED ARCHITECT RETAINED BY THE CONTRACTOR.

ALL TRUSSES SPACE 24" O.C. UNLESS OTHERWISE SPECIFIED.

NOTE: LABELING TRUSSES IS A SERVICE, NOT A REQUIREMENT. ENGINEERED DRAWINGS SUPERSEDES LABELING OF TRUSSES. IT IS THE RESPONSIBILITY OF THE BUILDER TO UTILIZE ENGINEERED DRAWINGS WHEN ERECTING THE TRUSSES.

UPLIFT CONNECTORS TO TRUSSES AND GIRDER TRUSSES IS THE RESPONSIBILITY OF THE ENGINEER, ARCHITECT, OR GC. NOT THE FABRICATOR. DO NOT CUT OR ALTER TRUSSES BEFORE NOTIFYING AND/OR APPROVAL IN WRITING BY FORT DALLAS TRUSS CO.

ALL NECESSARY REPAIRS TO TRUSSES MUST BE REPORTED TO FORT DALLAS TRUSS CO. WITHIN 48 HOURS OF DISCOVERY. TRUSS LAYOUT IS A PLACEMENT PLAN ONLY.

REVISION OF THIS SHOP DRAWING BY PROFESSIONAL ENGINEER IS IN COMPLIANCE OF POLICY REGARDING THE CONSTRUCTION DOCUMENTS. ENGINEER TO REVIEW ALL DRAWING SUBMITTED TO FORT DALLAS TRUSS CO. FOR GENERAL CONFORMANCE TO DESIGN. IT IS THE ENGINEER FOR COMPLETE CORRELATION OF THE INFORMATION PROVIDED IN THIS SHOP DRAWING WITH ALL OTHER TRADES, STRUCTURAL BEAMS, WALLS AND FOUNDATION REQUIREMENTS OF THE RBC.

****ATTENTION BUILDER****

ALL DIMENSIONS, OVERHANGS, PITCH, ETC TO BE CHECKED BEFORE ORDERING TRUSSES IT IS YOUR RESPONSIBILITY TO CHECK OUR TRUSS PLAN

JOSE MARTINEZ, P.E.
Consulting Engineer Civil/Structural
24 E. 5th Street
Hialeah, FL 33010
(Florida P.E. 031509)

STATEMENT in my professional judgement and to best of my knowledge and belief, these truss specifications comply with applicable building codes.

SEAL

NO.	DATE	APP.
1	5-15-18	JS
2	5-15-18	JMS

DRAWN BY: E. CASTILLO DATE: 5-15-18 QC: JS
CHECKED BY: E. CASTILLO DATE: 5-15-18 APP: JMS
DRAWING NUMBER: 18E10

FORT DALLAS TRUSS COMPANY, LLC.
FABRICATORS OF METAL CONNECTOR TRUSSES
14800 NW 57 AVE. MIAMI LAKES, FL 33014
OFFICE: (305) 821-5100 FAX: (305) 821-5105
DESIGN CRITERIA: ANSI/TPI 1-2014 FBC 2017 RESIDENTIAL
WWW.FORTDALLASTRUSS.COM
E-MAIL: FORTDALLAS@AOL.COM

SHOP DRAWING APPROVAL
I HAVE VERIFIED ALL DIMENSIONS, TRUSS LOADS, AND APPROVE THIS FABRICATION OF TRUSSES AS SHOWN ON THIS DRAWING.

DATE: _____

BY: _____ AND/OR: _____

CUSTOMER:
JOB NAME:
JOB ADDRESS:
SALESPERSON:
MODEL:
LEGAL ADDRESS:

THIS TRUSS PLACEMENT DIAGRAM IS ONLY FOR THE USE OF THE GENERAL CONTRACTOR, AND ANY OTHER PERSON RECEIVING IT IS NOT INTENDED TO BE A CONSTRUCTION DOCUMENT OR PLAN. THE ARCHITECT HAS THE RESPONSIBILITY OF ENSURING THAT THE TRUSSES ARE INCLUDED AND DIRECT THEM TO TPI BULLETIN NO. 61

INSTALLATION AND USE: DO NOT CUT OR ALTER TRUSSES WITHOUT FIRST CONTACTING THE TRUSS DESIGNER. DO NOT INSTALL TRUSSES AND REPORT ANY DAMAGED TRUSSES BEFORE INSTALLING. HANDLING, INSTALLING AND BRACING OF TRUSSES IS THE RESPONSIBILITY OF THE INSTALLING CONTRACTOR. FOR GENERAL GUIDANCE REGARDING THE HANDLING, INSTALLING AND BRACING OF METAL CONNECTOR TRUSSES, REFER TO BCSI 1-03 "BRACING WOOD TRUSSES" AVAILABLE FROM THE TRUSS PLATE INSTITUTE, 583 D'ONOFRIO DRIVE, MADISON, WI 53719. THESE DRAWINGS ARE DESIGNED TO BE USED BY PROFESSIONAL CONTRACTORS WITH SUFFICIENT EXPERIENCE IN TRUSS INSTALLATION AND HANDLING.

ALL HANGERS IN THIS TABLE MUST BE NAILED TO ITS FULL CAPACITY, WITH NAILS OR BOLTS AS REQUIRED BY SPECIFIC HANGER.

HANGER LIST

HANGER MANUF.	HANGER I.D.	TRUSS I.D.

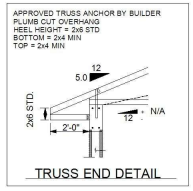

TRUSS END DETAIL

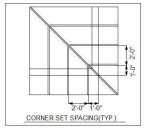

CORNER SET SPACING(TYP.)

COMPONENTS/CLADDING ASCE 7-10
TRUSS LOADING CONDITONS

ROOF TRUSS		FLOOR TRUSS	
TOP CHORD LIVE:	30.0	TOP CHORD LIVE:	N/A
TOP CHORD DEAD:	15.0	TOP CHORD DEAD:	N/A
BOTTOM CHORD DEAD:	10.0	BOTTOM CHORD DEAD:	N/A
TOTAL LOAD:	55.0	TOTAL LOAD:	N/A
LUMBER STRESS INCREASE:	1.33	LUMBER STRESS INCREASE:	N/A
PLATE STRESS INCREASE:	1.00	PLATE STRESS INCREASE:	N/A
EXPOSURE CATEGORY:			C
BUILDING CATEGORY:			II
WIND DESIGN VELOCITY:			170 MPH
IMPORTANCE FACTOR:			1.00
WIND LOAD DURATION FACTOR:			1.60

!!! IMPORTANT NOTE !!! ERECTING ROOF TRUSSES IS A COMPLEX TASK TO BE PERFORMED BY EXPERIENCED PROFESSIONALS. FORT DALLAS TRUSS CO. EXPECTS THE TRUSS ERECTION PERSON TO THOROUGHLY PREP THESE TRUSSES BEFORE ERECTING THEM. NO CONSIDERATION WILL BE MADE BY FORT DALLAS TRUSS CO. FOR LOSS OF TIME OR ADDITIONAL CRANE USAGE. FORT DALLAS TRUSS CO. WILL BE RESPONSIBLE ONLY FOR REPLACING OR REPAIRING DAMAGED TRUSSES OR THOSE WITH MANUFACTURING DEFECTS OR DO NOT CONFORM TO APPROVED LAYOUT.

TRUSSES ARE DESIGNED IN ACCORANCE WITH FBC UNLESS OTHERWISE SPECIFIED

SHEATHING UNDER ALL VALLEY SETS BY BLDR.

PLEASE REFER TO INDIVIDUAL ENGINEERING SHEETS FOR NUMBER OF PLIES AND NAILING/BOLTING PATTERN REQUIRED FOR GIRDER TRUSSES. SET-BACK FOR HIPS, ETC.

NOTE: NORMALLY ALL TRUSSES ARE SPACED 24" O.C.

ALL UPLIFT CONNECTION TO TRUSSES AND GIRDER TRUSSES IS THE RESPONSIBILITY OF ENG., ARCH., OR GENERAL CONTRACTOR

★ SPECIAL HANGERS BY PURCHASER OF TRUSS PACKAGE

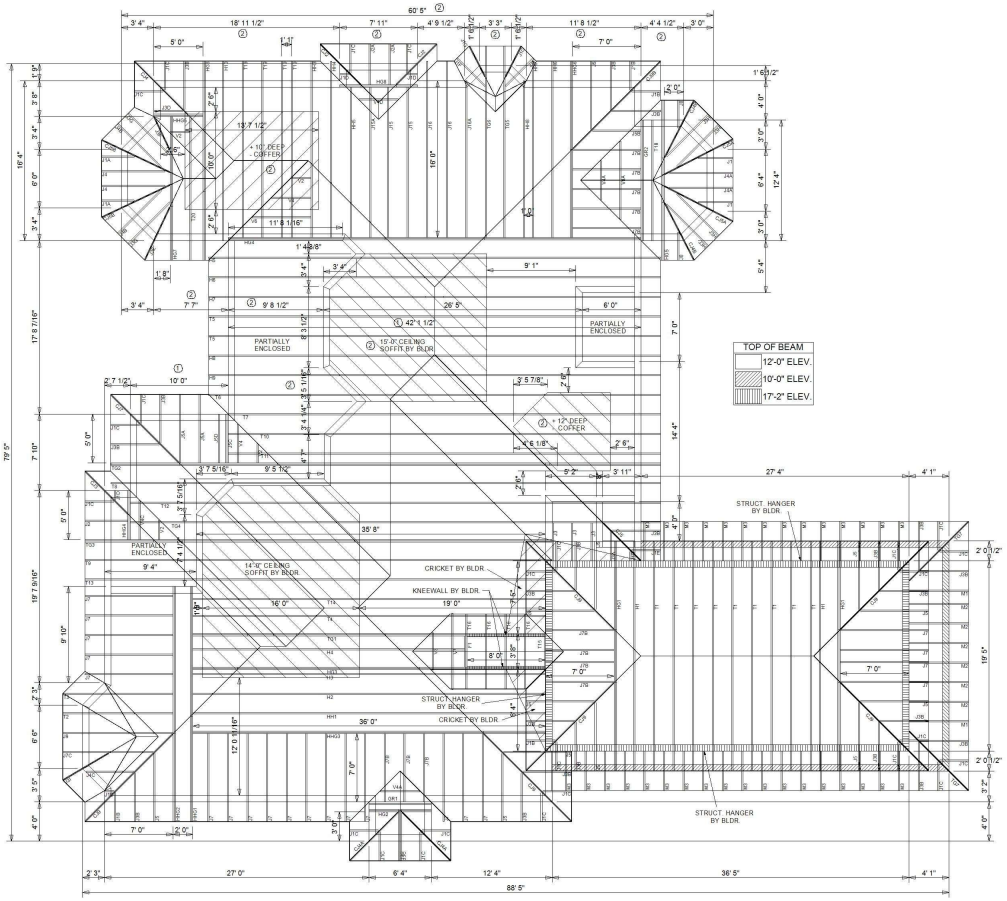

ROOF TRUSS LAYOUT

SCALE = 3/16" = 1'-0"

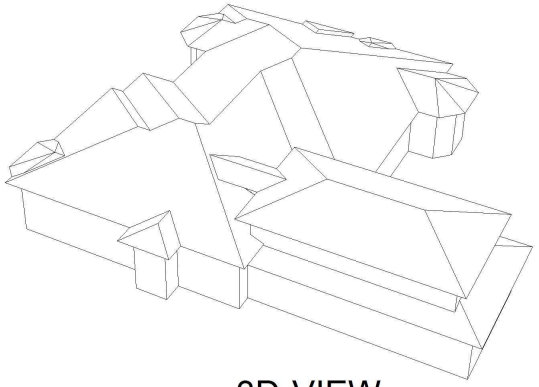

3D-VIEW

ROOF AREA: 6094.44 SQ. FT.

DIFFERENT TRUSS DESIGN
122