FOR TRUSSES HAVING AN OVERALL LENGTH OF 35 FEET (10.7m) OR 6 FEET (1.8m) OVERALL HEIGHT, ERECTION SHALL BE SUPERVISED BY EITHER A REGISTERED PROFESSIONAL ENGINEER OR REGISTERED ARCHITECT RETAINED BY THE CONTRACTOR.

ALL TRUSSES SPACE 24" O.C. UNLESS OTHERWISE SPECIFIED.

NOTE: LABELING TRUSSES IS A SERVICE, NOT A REQUIREMENT. ENGINEERED DRAWINGS SUPERSEDES LABELING OF TRUSSES. IT IS THE RESPONSIBILITY OF THE BUILDER TO UTILIZE ENGINEERED DRAWINGS WHEN ERECTING THE TRUSSES.

UPLIFT CONNECTORS TO TRUSSES AND GIRDER TRUSSES IS THE RESPONSIBILITY OF THE ENGINEER, ARCHITECT, OR GC. NOT THE FABRICATOR. DO NOT CUT OR ALTER TRUSSES BEFORE NOTIFYING AND/OR APPROVAL IN WRITING BY FORT DALLAS TRUSS CO.

ALL NECESSARY REPAIRS TO TRUSSES MUST BE REPORTED TO FORT DALLAS TRUSS CO. WITHIN 48 HOURS OF DISCOVERY. TRUSS LAYOUT IS A PLACEMENT PLAN ONLY.

REVISION OF THIS SHOP DRAWING BY PROFESSIONAL ENGINEER IS IN COMPLIANCE OF POLICY 103 OF THE TEXAS BOARD OF PROFESSIONAL ENGINEERS. THE ENGINEER OF RECORD FOR THE BUILDING SHALL REVIEW THE SHOP DRAWINGS PLACED BY FORT DALLAS TRUSS CO. PRIOR TO ISSUE TO THE ENGINEER FOR COMPLETE CORRELATION OF THE INFORMATION PROVIDED IN THIS SHOP DRAWING WITH ALL OTHER TRADES, STRUCTURAL BEAMS, WALLS AND FOUNDATION REQUIREMENTS OF THE RBC.

****ATTENTION BUILDER****

**ALL DIMENSIONS, OVERHANGS, PITCH, ETC TO BE CHECKED BEFORE ORDERING TRUSSES IT IS YOUR RESPONSIBILITY TO CHECK OUR TRUSS PLAN**


**JOSE MARTINEZ, P.E.**
**Consulting Engineer Civil/Structural**
**24 E. 5th Street**
**Hialeah, FL 33010**
**(Florida P.E. 031509)**


**STATEMENT in my professional judgement and to best of my knowledge and belief, these truss specifications comply with applicable building codes.**

SEAL

| NO | DATE | APP | DESCRIPTION |
|---|---|---|---|
| 1 | 11-30-18 | AH | ADD'L TC |
| 2 | 11-30-18 | AH | ADD'L TC |

DRAWN BY: AH DATE: 11-07-18
CHECKED BY: AH DATE: 11-8-18
SCALE: NTS
DRAWING NUMBER: 18K06

FORT DALLAS TRUSS COMPANY, LLC.
FABRICATORS OF METAL CONNECTOR TRUSSES
DESIGNERS OF WOOD TRUSSES
WWW.FORTDALLASTRUSS.COM
DESIGNED FOR:
T-MBC-031509

**ALL HANGERS IN THIS TABLE MUST BE NAILED TO ITS FULL CAPACITY, WITH NAILS OR BOLTS AS REQUIRED BY SPECIFIC HANGER.**

**HANGER LIST**

| HANGER MANUF. | HANGER I.D. | TRUSS I.D. |
|---|---|---|
| | | |

**COMPONENTS/CLADDING ASCE 7-10**
**TRUSS LOADING CONDITONS**

| ROOF TRUSS | | FLOOR TRUSS | |
|---|---|---|---|
| TOP CHORD LIVE: | 30.0 | TOP CHORD LIVE: | N/A |
| TOP CHORD DEAD: | 15.0 | TOP CHORD DEAD: | N/A |
| BOTTOM CHORD DEAD: | 10.0 | BOTTOM CHORD DEAD: | N/A |
| TOTAL LOAD: | 55.0 | TOTAL LOAD: | N/A. |
| LUMBER STRESS INCREASE: | 1.33 | LUMBER STRESS INCREASE: | N/A |
| PLATE STRESS INCREASE: | 1.00 | PLATE STRESS INCREASE: | N/A |
| EXPOSURE CATEGORY: | | | C |
| BUILDING CATEGORY: | | | II |
| WIND DESIGN VELOCITY: | | | 176 MPH |
| IMPORTANCE FACTOR: | | | 1.00 |
| WIND LOAD DURATION FACTOR: | | | 1.60 |

**!!! IMPORTANT NOTE !!!** ERECTING ROOF TRUSSES IS A COMPLEX TASK TO BE PERFORMED BY EXPERIENCED PROFESSIONALS. FORT DALLAS TRUSS CO. EXPECTS THE TRUSS ERECTION PERSON TO THOROUGHLY PREP THESE TRUSSES BEFORE ERECTING THEM. NO CONSIDERATION WILL BE MADE BY FORT DALLAS TRUSS CO. FOR LOSS OF TIME OR ADDITIONAL CRANE USAGE. FORT DALLAS TRUSS CO. WILL BE RESPONSIBLE ONLY FOR REPLACING OR REPAIRING DAMAGED TRUSSES OR THOSE WITH MANUFACTURING DEFECTS OR DO NOT CONFORM TO APPROVED LAYOUT.

TRUSSES ARE DESIGNED IN ACCORANCE WITH FBC UNLESS OTHERWISE SPECIFIED

**SHEATHING UNDER ALL VALLEY SETS BY BLDR.**

PLEASE REFER TO INDIVIDUAL ENGINEERING SHEETS FOR NUMBER OF PLIES AND NAILING/BOLTING PATTERN REQUIRED FOR GIRDER TRUSSES. SET-BACK FOR HIPS, ETC.

NOTE: NORMALLY ALL TRUSSES ARE SPACED 24" O.C.

ALL UPLIFT CONNECTION TO TRUSSES AND GIRDER TRUSSES IS THE RESPONSIBILITY OF ENG., ARCH., OR GENERAL CONTRACTOR

* SPECIAL HANGERS BY PURCHASER OF TRUSS PACKAGE

TOP OF BEAM
15'-4" ELEV.
9'-4" ELEV.

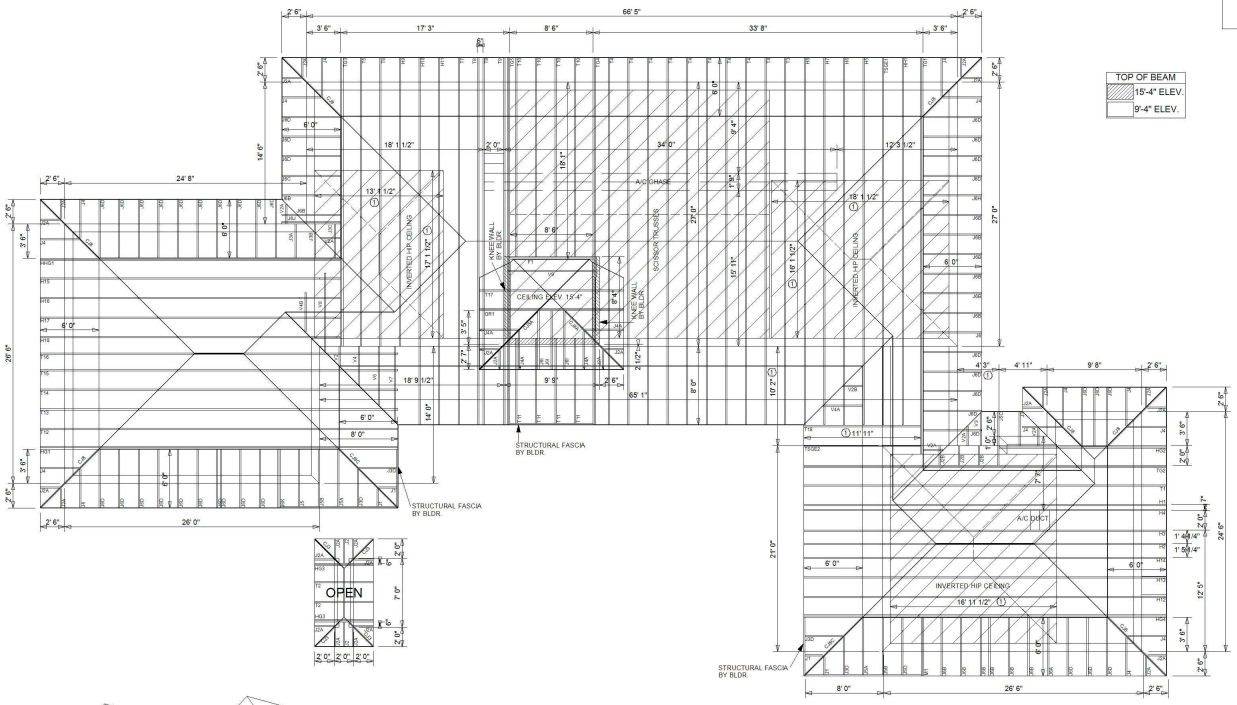


# ROOF TRUSS LAYOUT

SCALE = 3/16" = 1'-0"

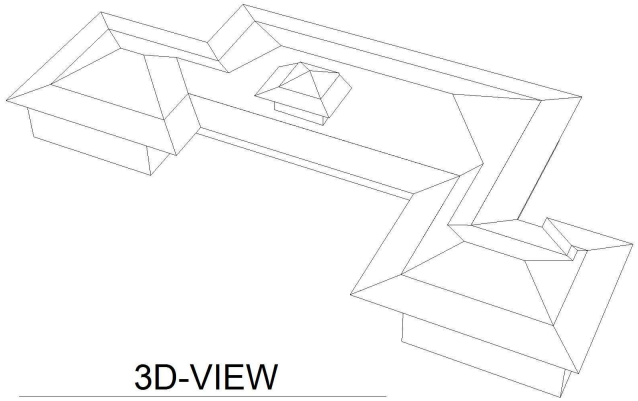

# 3D-VIEW

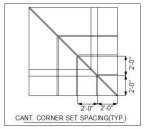


CANT. CORNER SET SPACING(TYP.)

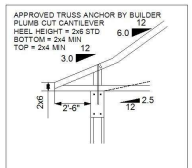


TRUSS END DETAIL

CUSTOMER:
JOB NAME:
JOB ADDRESS:
SALESPERSON:
MODEL:
LEGAL ADDRESS:

THIS TRUSS PLACEMENT DIAGRAM IS THE RESPONSIBILITY OF THE GENERAL CONTRACTOR, AND ARCHITECT TO VERIFY THAT IT IS NOT INTENDED TO BE A STRUCTURAL DESIGN. THIS PLAN, WHICH IS THE RESPONSIBILITY OF THE ARCHITECT OR OWNER BUILDER, INCLUDES AND DIRECTS THE INSTALLER TO THE BULLETIN NO. 91.

**INSTALLATION AND USE:** DO NOT CUT OR ALTER TRUSSES WITHOUT FIRST CONTACTING US. DO NOT ERECT ANY DAMAGED TRUSSES AND REPORT ANY DAMAGED TRUSSES IMMEDIATELY. ERECTION, BRACING AND USE OF THESE COMPONENTS IS THE SOLE RESPONSIBILITY OF OTHERS. INSTALLING AND USING THESE COMPONENTS OFFER NO WARRANTIES AS TO THEIR SUITABILITY FOR ANY PARTICULAR PURPOSE. ALL LOADS ON BARRIERS INSTALLATION OF THESE ISSUES, BLOCK'S PLIERS, AND LOSS OF PROPERTY AND/OR LIFE ARE THE RESPONSIBILITY OF THE CONTRACTORS WITH SUFFICIENT EXPERIENCE IN TRUSS INSTALLATION PRECAUTIONS.

ROOF AREA: 5157.49 SQ. FT.

DIFFERENT TRUSS DESIGN
97