UPLIFT CONNECTORS TO TRUSSES AND GIRDER TRUSSES IS THE RESPONSIBILITY OF THE ENGINEER, ARCHITECT, OR GC. NOT THE FABRICATOR. DO NOT CUT OR ALTER TRUSSES BEFORE NOTIFYING AND/OR APPROVAL IN WRITING BY FORT DALLAS TRUSS CO.

ALL NECESSARY REPAIRS TO TRUSSES MUST BE REPORTED TO FORT DALLAS TRUSS CO. WITHIN 48 HOURS OF DISCOVERY. TRUSS LAYOUT IS A PLACEMENT PLAN ONLY.

REVISION OF THIS SHOP DRAWING BY PROFESSIONAL ENGINEER IS IN COMPLIANCE OF POLICY NO. 5 METRO DADE COUNTY BUILDING AND ZONING DEPARTMENT EXCEPT FOR ALL BUILDING COMPONENTS NOT FABRICATED BY FORT DALLAS TRUSS CO. REFER TO ARCHITECT OR ENGINEER FOR COMPLETE CORRELATION OF THE INFORMATION PROVIDED IN THIS SHOP DRAWING WITH ALL OTHER TRADES, STRUCTURAL BEAMS, WALLS AND FOUNDATION REQUIREMENTS OF THE FBC.

FOR TRUSSES HAVING AN OVERALL LENGTH OF 35 FEET (10.7m) OR 6 FEET (1.8m) OVERALL HEIGHT, ERECTION SHALL BE SUPERVISED BY EITHER A REGESTRED PROFESSIONAL ENGINEER OR REGISTERED ARCHITECT RETAINED BY THE CONTRACTOR.

ALL TRUSSES SPACE 24" O.C. UNLESS OTHERWISE SPECIFIED.

NOTE: LABELING TRUSSES IS A SERVICE, NOT A REQUIREMENT. ENGINEERED DRAWINGS SUPERSEDES LABELING OF TRUSSES. IT IS THE RESPONSIBILITY OF THE BUILDER TO UTILIZE ENGINEERED DRAWINGS WHEN ERECTING THE TRUSSES.

****ATTENTION BUILDER****

ALL DIMENSIONS, OVERHANGS, PITCH, ETC TO BE CHECKED BEFORE ORDERING TRUSSES IT IS YOUR RESPONSIBLITY TO CHECK OUR TRUSS PLAN

JOSE MARTINEZ, P.E.
Consulting Engineer Civil/Structural
24 E. 5th Street
Hialeah, FL 33010
(Florida P.E. 031509)

STATEMENT in my professional judgement and to best of my knowledge and belief, these truss specifications comply with applicable building codes.

SEAL

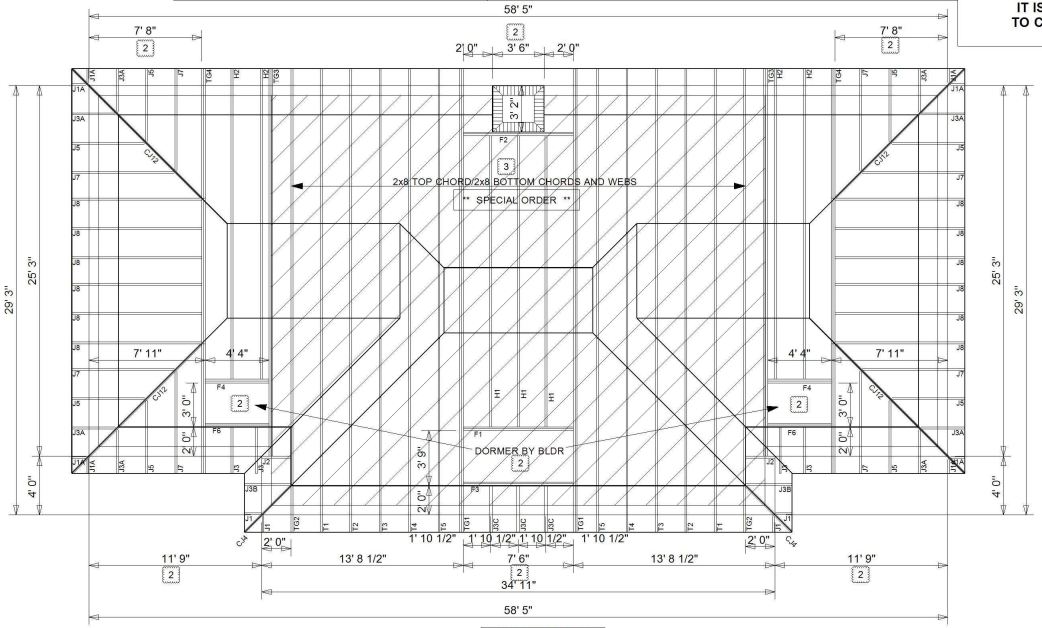

TOP OF BEAM
14'-2" ELEV.
29'-10' ELEV.

ROOF TRUSS LAYOUT

SCALE = 3/16" = 1'-0"

ALL HANGERS IN THIS TABLE MUST BE NAILED TO ITS FULL CAPACITY, WITH NAILS OR BOLTS AS REQUIRED BY SPECIFIC HANGER.

HANGER LIST

HANGER MANUF.	HANGER I.D.	TRUSS I.D.

COMPONENTS/CLADDING ASCE 7-10 TRUSS LOADING CONDITONS			
ROOF TRUSS		FLOOR TRUSS	
TOP CHORD LIVE:	30.0	TOP CHORD LIVE:	N/A
TOP CHORD DEAD:	15.0	TOP CHORD DEAD:	N/A
BOTTOM CHORD DEAD:	10.0	BOTTOM CHORD DEAD:	N/A
TOTAL LOAD:	55.0	TOTAL LOAD:	N/A
LUMBER STRESS INCREASE:	1.33	LUMBER STRESS INCREASE:	N/A
PLATE STRESS INCREASE:	1.00	PLATE STRESS INCREASE:	N/A
EXPOSURE CATEGORY:			C
BUILDING CATEGORY:			II
WIND DESIGN VELOCITY:			175MPH
IMPORTANCE FACTOR:			1.00
WIND LOAD DURATION FACTOR:			1.60

!!! IMPORTANT NOTE !!! ERECTING ROOF TRUSSES IS A COMPLEX TASK TO BE PERFORMED BY EXPERIENCED PROFESSIONALS. FORT DALLAS TRUSS CO. EXPECTS THE TRUSS ERECTION PERSON TO THOROUGHLY PREP THESE TRUSSES BEFORE ERECTING THEM. NO CONSIDERATION WILL BE MADE BY FORT DALLAS TRUSS CO. FOR LOSS OF TIME OR ADDITIONAL CRANE USAGE. FORT DALLAS TRUSS CO. WILL BE RESPONSIBLE ONLY FOR REPLACING OR REPAIRING DAMAGED TRUSSES OR THOSE WITH MANUFACTURING DEFECTS OR DO NOT CONFORM TO APPROVED LAYOUT.

TRUSSES ARE DESIGNED IN ACCORANCE WITH FBC UNLESS OTHERWISE SPECIFIED

SHEATHING UNDER ALL VALLEY SETS BY BLDR.

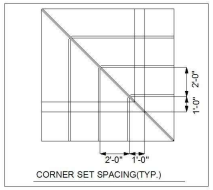

CORNER SET SPACING(TYP.)

PLEASE REFER TO INDIVIDUAL ENGINEERING SHEETS FOR NUMBER OF PLIES AND NAILING/BOLTING PATTERN REQUIRED FOR GIRDER TRUSSES. SET-BACK FOR HIPS, ETC.

NOTE: NORMALLY ALL TRUSSES ARE SPACED 24" O.C.

ALL UPLIFT CONNECTION TO TRUSSES AND GIRDER TRUSSES IS THE RESPONSIBILITY OF ENG., ARCH., OR GENERAL CONTRACTOR

* SPECIAL HANGERS BY PURCHASER OF TRUSS PACKAGE

ROOF AREA: 2345.68 SQ. FT.

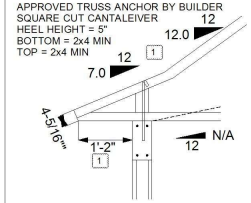

TRUSS END DETAIL

3D-VIEW

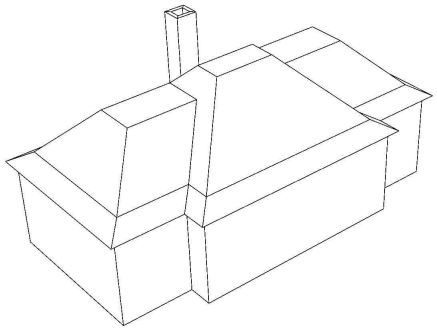

	DATE	APP.
4		
3	4-11-17	JMS
2	3-7-17	GC
1	2-16-17	GC

3-17 OTM
2-16-17 TS

DRAWN BY 2-1-17 GC
CHECKED BY
DRAWING NUMBER 17A36

FORT DALLAS TRUSS COMPANY, LLC.
FABRICATORS OF ROOF & FLOOR WOOD TRUSSES
7085 S.W. 44TH STREET
MIAMI, FL 33155
(305)667-6797 WWW.BEST-TRUSS.COM
FAX (305)667-6797 1-855-273-1034

SHOP DRAWING APPROVAL
I HAVE VERIFIED ALL DIMENSIONS, TRUSS LAYOUT, OVERHANG DETAILS, NUMBER OF TRUSSES, PITCH, AND BEARING WALL LOCATIONS, AND APPROVE THEM AS SHOWN.

DATE _____

BY _____ AND/OR _____

CUSTOMER:
JOB NAME:
JOB ADDRESS:
SALESPERSON:
MODEL:
LEGAL ADDRESS:

THIS TRUSS PLACEMENT DIAGRAM IS THE RESPONSIBILITY OF THE GENERAL CONTRACTOR AND TRUSS ERECTION CONTRACTOR. IT IS NOT INTENDED TO BE A BUILDING PLAN, BUT ONLY THE PLACEMENT PLAN WHICH IS THE RESPONSIBILITY OF THE ARCHITECT OR ENGINEER OF RECORD TO PROVIDE FOR BRACING, HANDLING AND ERECTION REFER TO TPI BULLETIN BCSI B-1.

INSTALLATION AND USE: DO NOT CUT OR ALTER TRUSSES WITHOUT FIRST CONTACTING THE DESIGNER, FABRICATOR, OR GENERAL CONTRACTOR. DO NOT INSTALL OR USE DAMAGED TRUSSES. TO FABRICATOR, PROPER INSTALLATION AND USE OF TRUSSES IS THE RESPONSIBILITY OF THE GENERAL CONTRACTOR. IT IS THE RESPONSIBILITY OF THOSE PERSONS INSTALLING AND USING THESE COMPONENTS. FORT DALLAS TRUSS CO., LLC. IS NOT RESPONSIBLE FOR THE LIABILITIES THAT MAY RESULT FROM DAMAGE, MISUSE, OR IMPROPER INSTALLATION OF THESE COMPONENTS, WHICH MAY RESULT FAILURES, BODILY INJURY AND LOSS OF PROPERTY AND/OR LIFE. TRUSSES MUST BE INSTALLED BY CONTRACTORS WITH SUFFICIENT EXPERIENCE IN TRUSS INSTALLATION AND HANDLING.

DIFFERENT TRUSS DESIGN
29